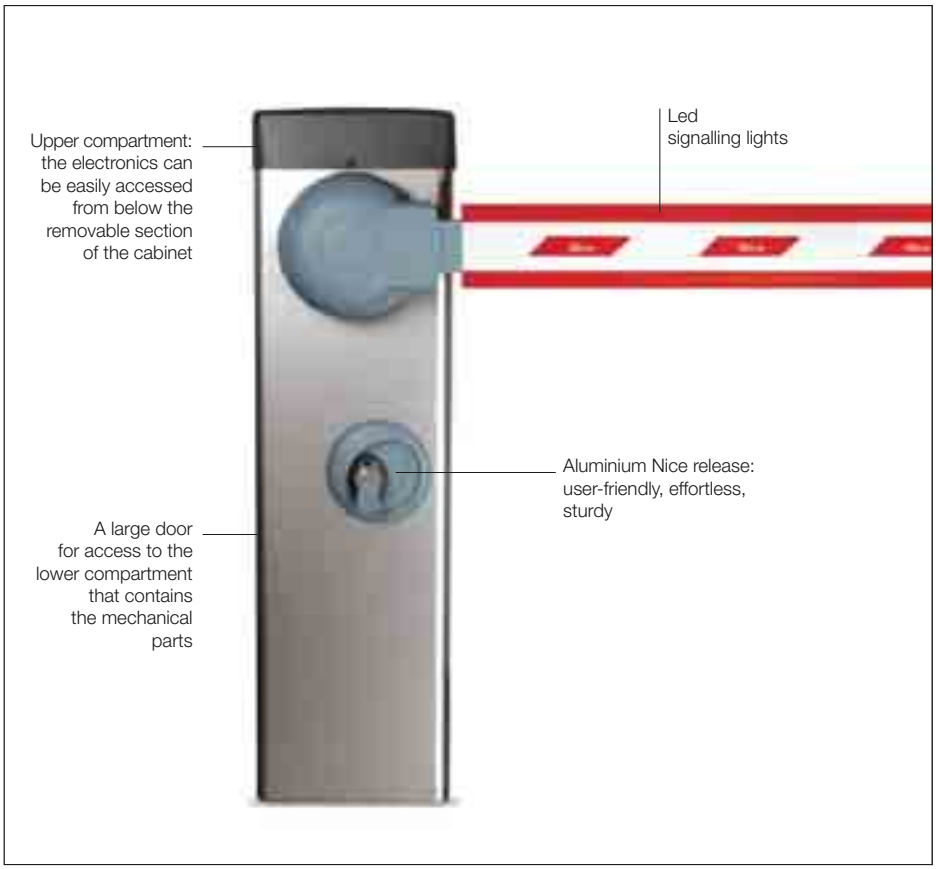

Code	Description
SIGNO3	For bars up to 3 m, irreversible 230 Vac, 24 Vdc motor, with galvanised steel painted case
SIGNO3I	For bars up to 3 m, irreversible 230 Vac, 24 Vdc motor, with satin stainless steel case
SIGNO4	For bars up to 4 m, irreversible 230 Vac, 24 Vdc motor, with galvanised steel painted case
SIGNO4I	For bars up to 4 m, irreversible 230 Vac, 24 Vdc motor, with satin stainless steel case
SIGNO6	For bars up to 6 m, irreversible 230 Vac, 24 Vdc motor, with galvanised steel painted case
SIGNO6I	For bars up to 6 m, irreversible 230 Vac, 24 Vdc motor, with satin stainless steel case

Technical specifications

Code	SIGNO3 - SIGNO3I	SIGNO4 - SIGNO4I	SIGNO6 - SIGNO6I
Electrical data			
Power supply (Vac 50/60 Hz)	230		
Absorption (A)	1.1	1.3	1.3
Power (W)	300	300	500
Performance data			
Min.÷max. opening time (s)	1.8÷4	3÷6	6÷10
Torque (Nm)	130	200	250
Work cycle (cycles/hour)	600	400	250
Dimensional and general data			
Protection level (IP)	44		
Working temp. (°C Min/Max)	-20 ÷ +50		
Dimensions (mm)	320x200x1070 h		420x220x1070 h
Weight (kg)	50		58

For private, public and industrial car parks.

Electromechanical barrier gate operator with encoder.

Powerful and quick: electromechanical 24 Vdc gear motor, 500 W power and up to 250 Nm torque.
It opens up completely (90°) in just 1.8 seconds (Signo3), 3 seconds (Signo4), 6 seconds (Signo6).
Models with a 230 Vac or 110 Vac power supply.

Even more sophisticated and well-developed new control unit:
The same for all models, it automatically recognises and memorises the Signo model on which it is installed thereby eliminating the first installation procedure.
Signals that the power supply is correct when started and that the control unit is functioning correctly.
Automatic diagnostics during operation, with differentiated visual signals according to the type of fault.

Intelligent: the manoeuvre will invert automatically if the bar comes into contact with an obstacle.
The control unit automatically corrects any eventual lack of balance linked to variations in the climate or poor installation.

Safe: the innovative control unit utilises a revolutionary management system of the force, speed, acceleration and deceleration that can be **programmed at 6 levels**, at the beginning and at the end of the manoeuvre.
Programming is intuitive and completely automatic with the Nice Encoder technology: Simply push a button and Signo will comprehend the limit switch limits.

Large openings: a master/slave selection automatically synchronises two opposing barriers enabling the automation of transit points up to 8 and 12 m.

Convenient: separate compartments for electronics and mechanics provide the user with easy access without damages to internal parts.

Exclusive functions:
- the barrier will close immediately after the vehicle has passed through;
- it has two types of traffic-light type signals;
- there is an automatic safety test at the beginning of each manoeuvre;
- constant resistance STOP input for connecting the latest generation of sensitive edges;
- there is a manoeuvre counter and it is possible to programme the maintenance alarm threshold.

Intensive use
The new, 24 Vdc gear motor Signo can be used intensively for long periods of time.
This characteristic makes it ideal for automating private, public or industrial car-parks which are subjected to the frequent passage of vehicles during the day.

Nice recommends customers order products in pallets in order to facilitate storage and delivery, and ensure packs are uniform. The number of packs per single pallet has been specified for this reason. Approximate draft.

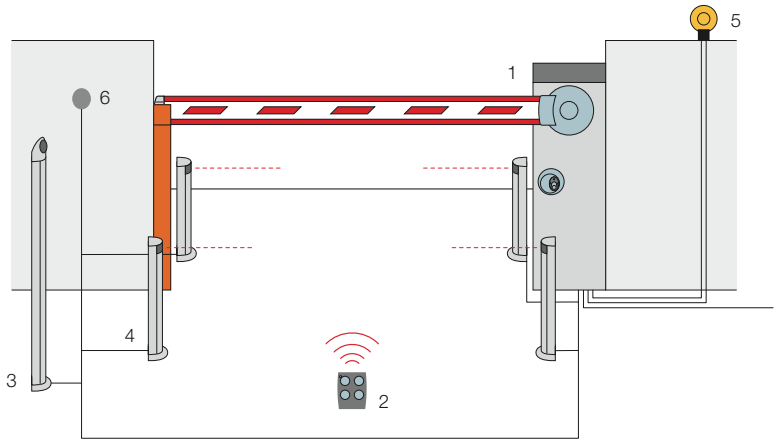

1. Signo **2.** Transmitter **3.** Key-operated selector on post **4.** Photocells mounted on posts **5.** Flashing light **6.** Digital or key switches.

Utilisation limits

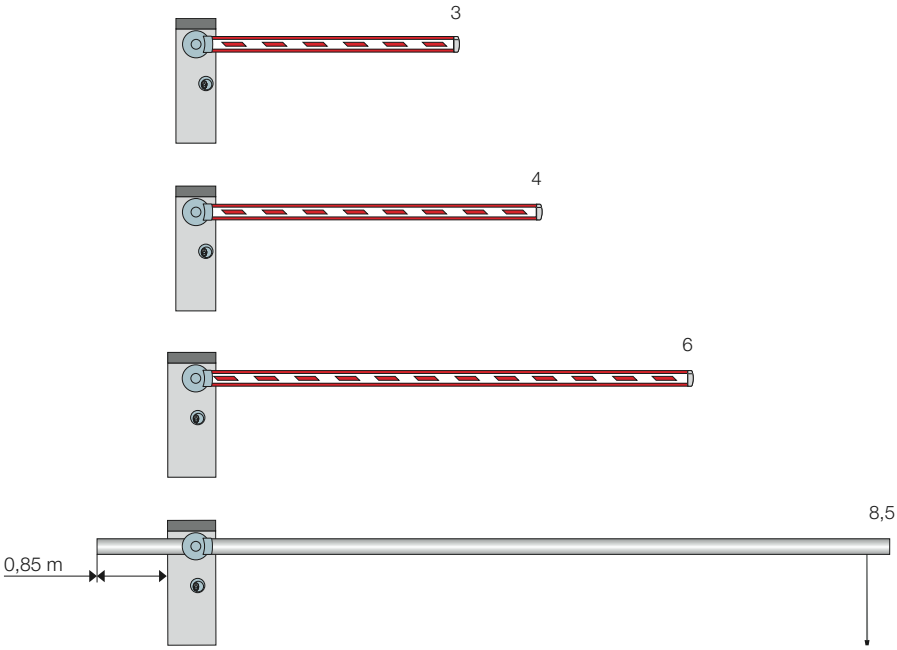

SIGNO3 / SIGNO3I up to 3 m
fully accessoried bar without rack and mobile stands, with limits to speed.

SIGNO4 / SIGNO4I up to 4 m
fully accessoried bar up to 3.75 m.

SIGNO6 / SIGNO6I up to 6 m
bar with complete set of accessories with limits to speed.

SIGNO6 / SIGNO6I up to 8.5 m
with WA24 (bar) without accessories, equipped with mobile stand, with limits to speed.

Bar lenght (m)

Tubular aluminium bars don't need the use of accessories (only WA11).

Nice Signo

Accessories for SIGNO3 / SIGNO3I

SIA3
Aluminium bar, painted white 36x73x3250 mm.

Pc/pack 1

WA25
Pivoting connection for rectangular bars up to 4 m.

Pc/pack 1

WA2
8 m pack of red shockproof rubber strip with caps to close SIA3 bar.

Pc/pack 1

SIA1
Anchorage base with clamps.

Pc/pack 1

Accessories for SIGNO4 / SIGNO4I

WA1
Aluminium bar, painted white 36x73x4250 mm.

Pc/pack 1

WA25
Pivoting connection for rectangular bars up to 4 m.

Pc/pack 1

WA2
8 m pack of red shockproof rubber strip with caps to close WA1 bar.

Pc/pack 1

WA13
Aluminium rack (2 m) for WA1, WA21, WA22 bars.

Pc/pack 1

WA14
Joint for rods WA1 (from 1950 mm to 2400 mm).

Pc/pack 1

WA3
Tubular aluminium bar, painted white Ø 70x4250 mm, suitable where there are strong winds. Only with WA11.

Pc/pack 1

WA4
Connection for the WA3 bar.

Pc/pack 1

SIA1
Anchorage base with clamps.

Pc/pack 1

Accessories for SIGNO6 / SIGNO6I

WA21
Aluminium bar, painted white 36x94x6250 mm.

Pc/pack 1

WA22
Modular bar, plus joint painted white, 2 sections 36x94x3125 mm.

Pc/pack 2

WA6
Pack 12 m of red shockproof rubber strip with caps to close the bars WA21, WA22.

Pc/pack 1

WA24
Tubular telescopic bar in white painted aluminium, max. length 8.5 m, complete with mobile support WA12, counterweight and connector.
6 meters overall length for transportation.
See draft page 93.
Pc/pack 1

WA7
Tubular aluminium bar, painted white Ø 90x6250 mm suitable where there are strong winds, only with WA11.

Pc/pack 1

Accessories for SIGNO6 / SIGNO6I

WA8
Connection
for the WA7 bar.

Pc/pack 1

WA13
Aluminium rack (2 m)
for WA1, WA21, WA22
bars.

Pc/pack 1

SIA2
Anchorage base
with clamps.

Pc/pack 1

Common accessories

SIA20
Spare control unit.

PS224
24 Vdc buffer battery.

Pc/pack 1

WA9
Pack of 6 flashing signals,
wired for WA1, WA21,
WA22 bars.

Pc/pack 6

WA10
Red adhesive
reflector strips.

Pc/pack 24

WA11
Adjustable stand
for bars.

Pc/pack 1

WA12
Mobile stand
for bars.

Pc/pack 1

PO
Support bracket
for photocells Bf, FE.

Pc/pack 4